GZ14Z

For R15 - 4 CO

Screw terminals
Max. tightening moment
for the terminal: 0,7 Nm
On panel mounting, behind
92,2 x 46 x 23 mm
Four poles
10 A, 250 V AC

Connection diagram

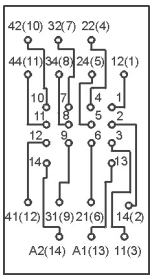

Mounting dimensions

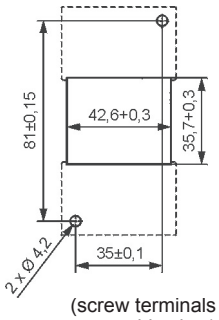

(screw terminals side view)

Accessories

GZ14 0737

Dimensions

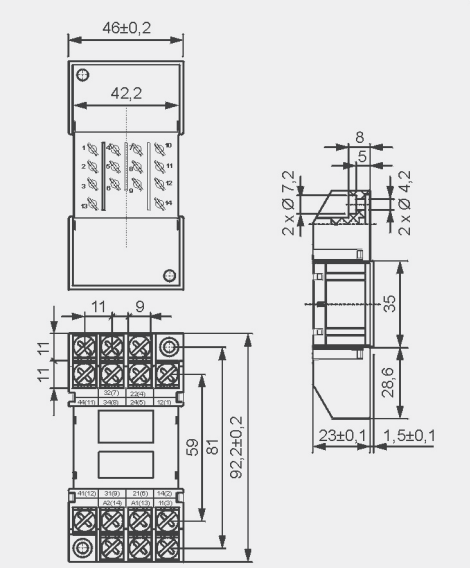

GUC11 ❼

For RUC faston 4,8x0,5, RUC-M

Screw terminals
Max. tightening moment
for the terminal: 0,7 Nm
35 mm rail mount
acc. to PN-EN 60715
or on panel mounting
82 x 42,2 x 26,5 mm
Three poles
16 A, 250 V AC

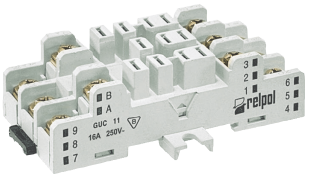

Connection diagram

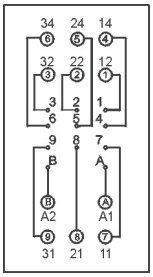

Accessories

MBA

Dimensions

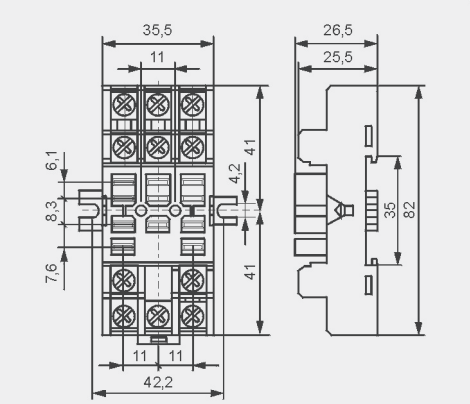

PI6W-1P

For RM699BV, RSR30 ❽

Screw terminals
Max. tightening moment
for the terminal: 0,3 Nm
35 mm rail mount
acc. to PN-EN 60715
98,5 x 6,2 x 85,5 mm
One pole
6 A, 250 V AC

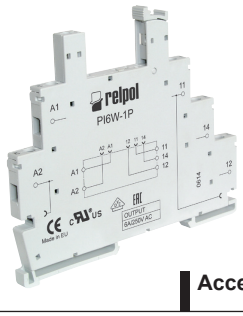

Connection diagram

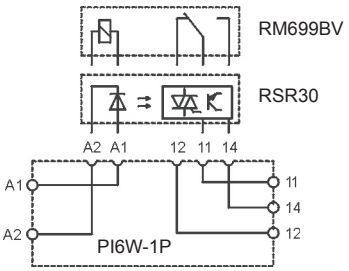

Accessories

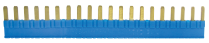

ZG20

PI6W-1246

Dimensions

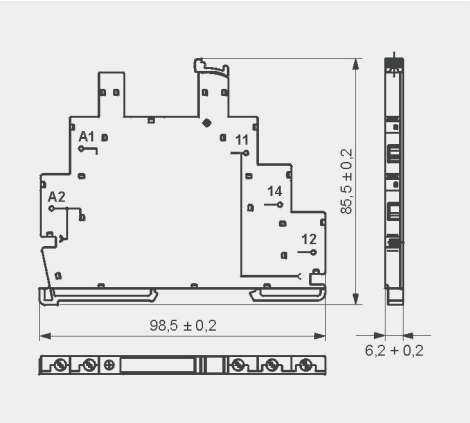

❼ For RUC faston 4,8 x 0,5 and RUC-M, with GUC11 socket, max. switching voltages and coil voltages of relays are limited to 250 V AC / DC.
❽ Solid state relays type **RSR30** - see www.relpol.com.pl

PRECAUTIONS:
1. Ensure that the parameters of the product described in its specification provide a safety margin for the appropriate operation of the device or system and never use the product in circumstances which exceed the parameters of the product. **2.** Never touch any live parts of the device. **3.** Ensure that the product has been connected correctly. An incorrect connection may cause malfunction, excessive heating or risk of fire. **4.** In case of any risk of any serious material loss or death or injuries of humans or animals, the devices or systems shall be designed so to equip them with double safety system to guarantee their reliable operation.

12.01.2015